GA DRAWING

ECT-08 /3H

7.5MTRS

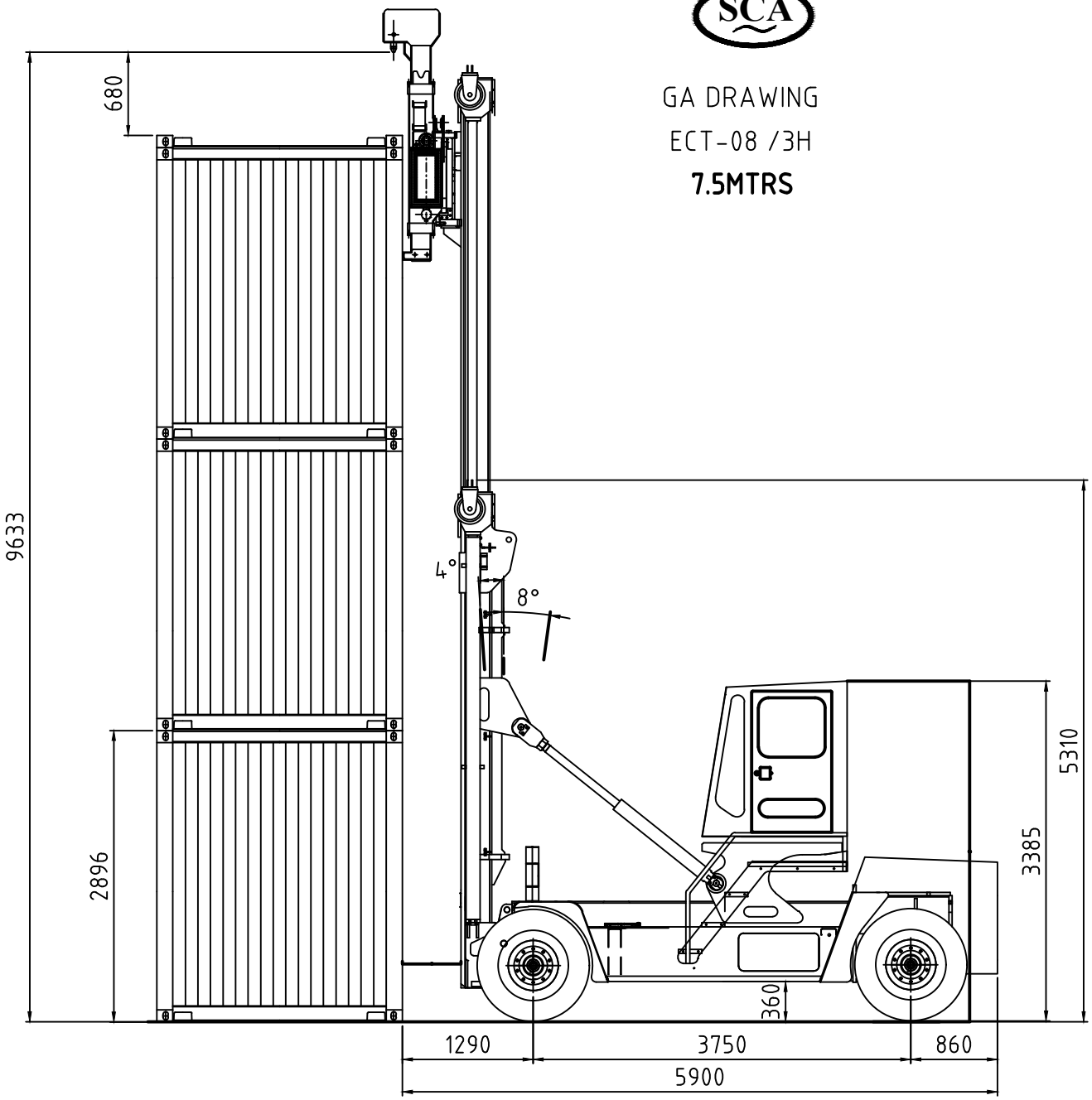

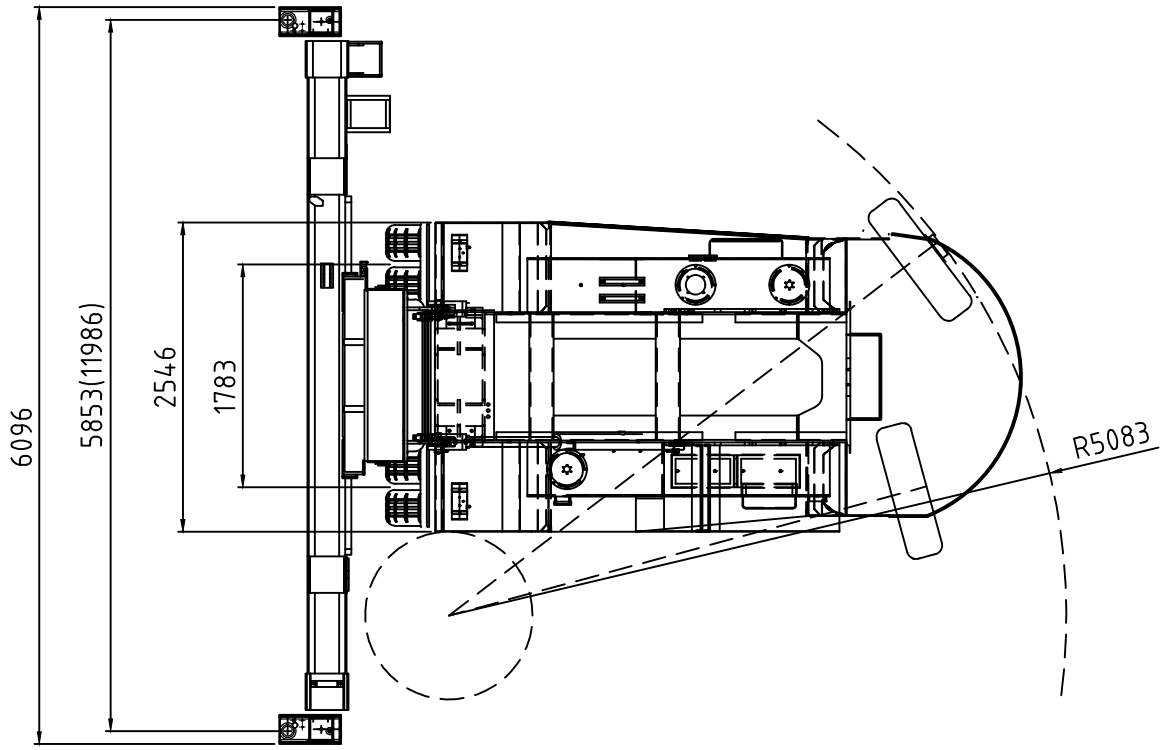

ALL DIMENSIONS ARE IN MM